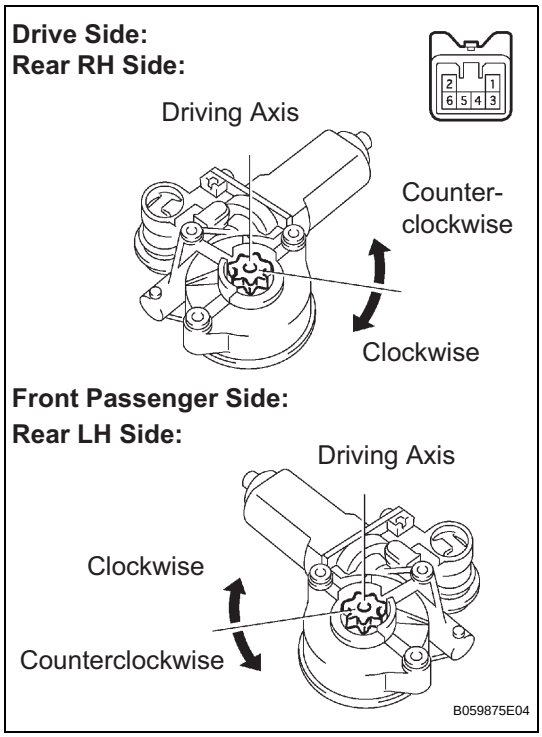

POWER WINDOW REGULATOR MOTOR

INSPECTION

1. INSPECT POWER WINDOW REGULATOR MOTOR ASSEMBLY

(a) Inspect the regulator motor operation.

HINT:

- The driver's side and rear RH regulator motors should be inspected in the same procedure.
- The passenger's side and rear LH regulator motors should be inspected in the same procedure.

(1) Check that the motor operates smoothly when battery positive voltage is applied to each terminal of the connector.

Standard:

Driver's side and rear RH side

Measurement Condition	Specified Condition
Battery positive (+) → Terminal 4 Battery negative (-) → Terminal 5	Clockwise toward driving axis
Battery positive (+) → Terminal 5 Battery negative (-) → Terminal 4	Counterclockwise toward driving axis

Front passenger's side and rear LH side

Measurement Condition	Specified Condition
Battery positive (+) → Terminal 5 Battery negative (-) → Terminal 4	Clockwise toward driving axis
Battery positive (+) → Terminal 4 Battery negative (-) → Terminal 5	Counterclockwise toward driving axis

If the result is not as specified, replace the motor.

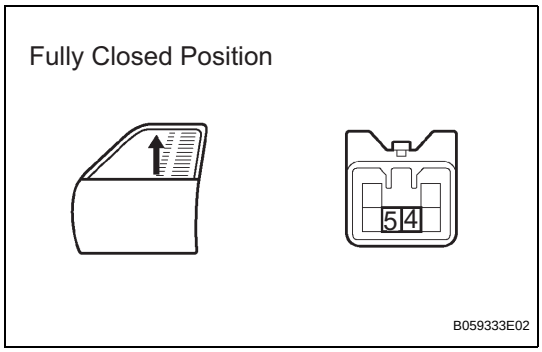

(b) Inspect the PTC operation inside the regulator motor.

NOTICE:

The inspection should be performed with the power window regulator and door glass installed to the vehicle.

(1) Set a DC 400 A probe of the TOYOTA electrical tester to terminal 4 or 5 of the wire harness.

NOTICE:

Match the arrow mark of the probe with the current direction.

(2) Set the door glass to the fully closed position.

(3) When 60 seconds have elapsed after the door glass is fully closed, pull the power window switch up once again. Check how long it takes for the current to change from approximately 16 to 34 A into 1 A or less.

Standard:

Approximately 4 to 90 seconds

WS

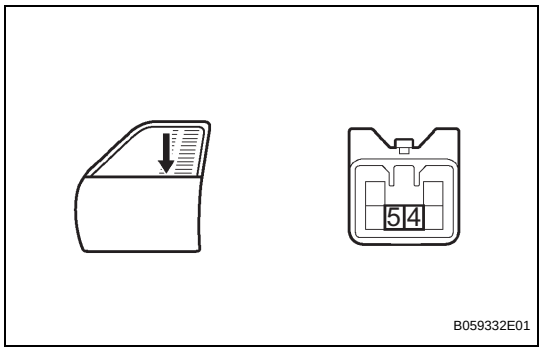

(4) When approximately 60 seconds have elapsed after the inspection of the current cut-off, check that the door glass moves down when the power window regulator DOWN switch is pushed.
If the result is not as specified, replace the motor.